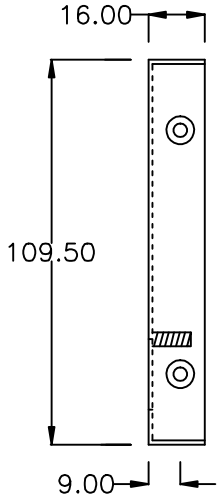

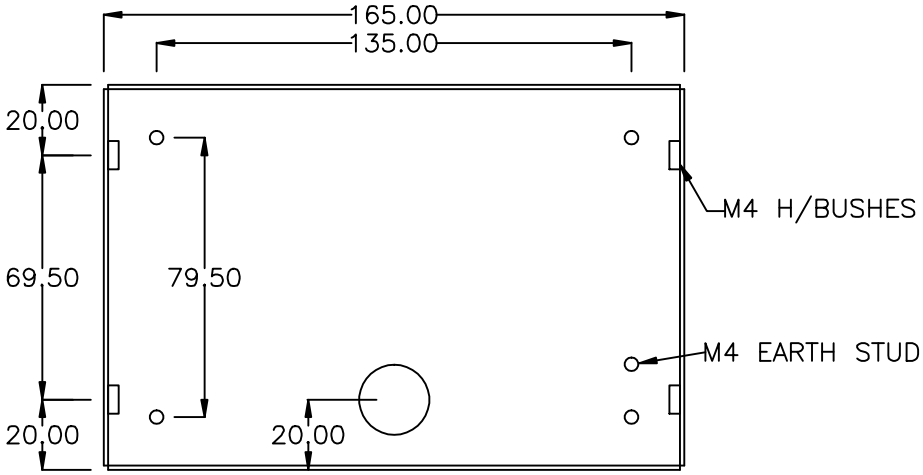

BACK BOX INSIDE VIEW

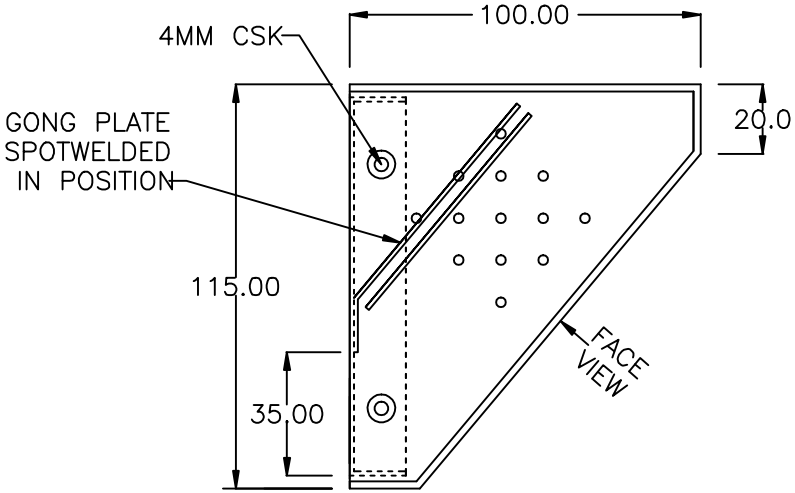

SIDE VIEW

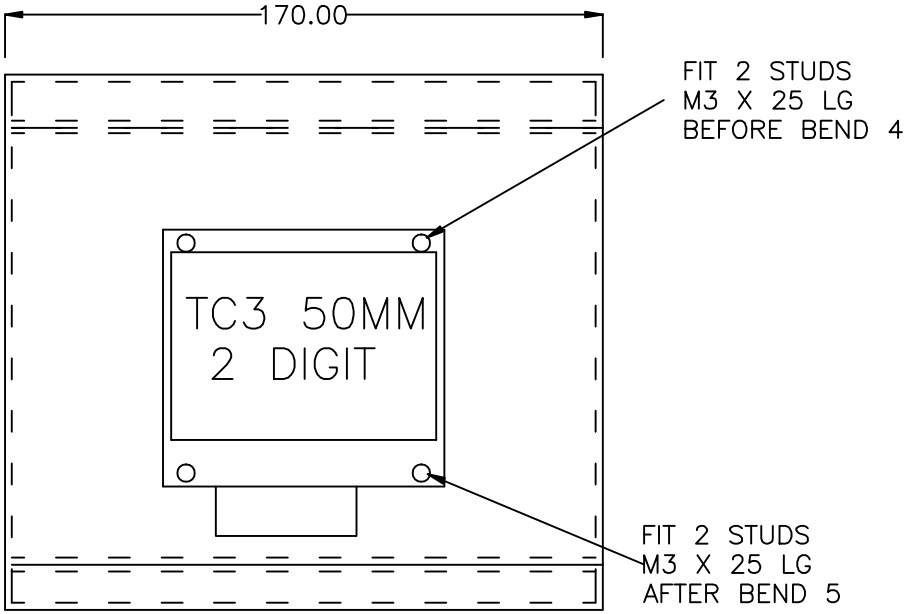

FACE VIEW

REV	DATE	BY	CHECKED	DESCRIPTION

MATERIAL: 2.0MM ST/ST DP1

FINISH: GRAINED

TITLE: ANGLED SURFACE MOUNTED TC3 50 2D GONG

Lester Controls

© THIS DOCUMENT CONTAINS INFORMATION BELONGING TO 4 SQUARE AND SHALL NOT BE REPRODUCED OR TRANSFERRED TO OTHER DOCUMENTS OR DISCLOSED TO OTHERS OR USED FOR ANY PURPOSE OTHER THAN THAT FOR WHICH IT IS FURNISHED WITHOUT THE PRIOR WRITTEN PERMISSION OF 4 SQUARE

DRAWN JOHN GOODWIN DATE 25/11/03

CHECKED DATE

APPROVED DATE

UNSPECIFIED TOLERANCES
ABOVE 100mm ± 1
UP TO 100mm ± 0.5
1 DEC PLACE ± 0.2
2 DEC PLACES ± 0.1
ANGLES ± 0.5

DRAWING No. TC3502DF/PDDA

A3

CAD REF:- XXXXXXX

DIMS. IN mm

SCALE 1:1

DO NOT SCALE DRAWING

SHEET X OF X