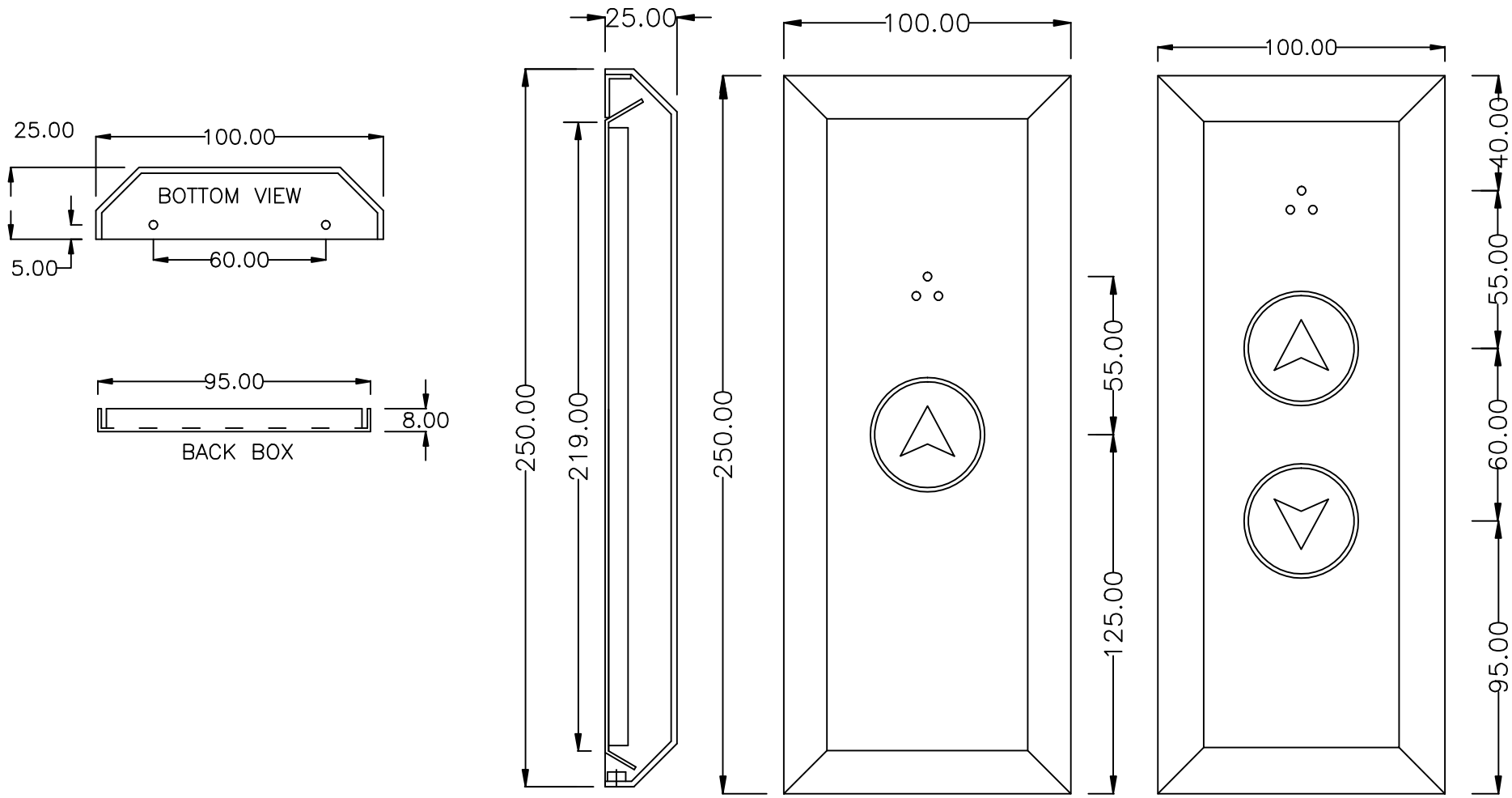

REV	DATE	BY	CHECKED	DESCRIPTION

MATERIAL: 2.0 MM ST/ST 304 DP1-PC1

FINISH: GRAINED

TITLE: **SURFACE MOUNTED 1 OR 2 BUTTON LANDING FACE PLATES**

Lester Controls.co.uk

© THIS DOCUMENT CONTAINS INFORMATION BELONGING TO 4 SQUARE AND SHALL NOT BE REPRODUCED OR TRANSFERRED TO OTHER DOCUMENTS OR DISCLOSED TO OTHERS OR USED FOR ANY PURPOSE OTHER THAN THAT FOR WHICH IT IS FURNISHED WITHOUT THE PRIOR WRITTEN PERMISSION OF 4 SQUARE

DRAWN: ALAN DRIVER
DATE: 13/08/11

CHECKED
DATE

APPROVED
DATE

UNSPECIFIED TOLERANCES
ABOVE 100mm ± 1
UP TO 100mm ± 0.5
1 DEC PLACE ± 0.2
2 DEC PLACES ± 0.1
ANGLES ± 0.5

DRAWING No. **1&2 BUTTF/250**

A3

CAD REF:- XXXXXXX

DIMS. IN mm

SCALE 1:1

DO NOT SCALE DRAWING

SHEET X OF X